QM-251 EX1

"TEN" SERVICE MANUAL

CAR COMPONENT SYSTEM BOOSTER AMPLIFIER

Model QM-251EX1

GENERAL

Protective circuit against temperature is built in this set.

When the inside temperature goes up to approx. 85°C in operating this set at high power continuously or in a high temperature, power output is automatically reduced to approx. 5W (max. output).

When the temperature falls down, this set returns to normal.

COMPOSITION

POWER AMPLIFIER QM-251EX1	—Power amplifier unit	QM-251	1
	—Bracket	RN-MBL-481	2
	—Bracket	RN-MBF-11	1
	—Installation screw		1
	—Lead assembly	RN-EWJ-2761A	1
	—Lead assembly	RN-EWJ-3382	1
	—Lead assembly	RN-EWJ-3173	1
	—Lead assembly	RN-EWJ-3449	1

FUJITSU TEN LIMITED

SPECIFICATIONS

POWER OUTPUT ..... 23 watts or better × 2 (1 kHz, T.H.D. = 1%)
42 watts or better × 2 (Max.)
INPUT IMPEDANCE ..... Approx. 10k ohm
SPEAKER IMPEDANCE ..... 4 ohm per channel
GAIN ..... 38 ± 2 dB (1 kHz, 100mV input, RCA termi.)
8 ± 2 dB (1 kHz, 400mV input, speaker termi.)
SIGNAL TO NOISE RATIO ..... 50 dB or better
SEPARATION ..... 40 dB or better
FREQUENCY RESPONSE ..... 100 ~ 10 kHz: ± 0.5 dB or less
30, 40 Hz: 3 dB or less
POWER INPUT ..... 12-volt car battery, negative terminal to ground
Voltage ..... 13.2 VDC
Current ..... Approx. 2.3 amperes (1 watt output)
Approx. 14 amperes (Max.)
SEMICONDUCTOR ..... 1 IC, 6 transistors, 8 diodes
DIMENSIONS ..... 150(W) × 50(H) × 160(D)mm (5-29/32", 1-31/32", 6-19/64")
WEIGHT ..... Approx. 1.5 kg

CONNECTIONS

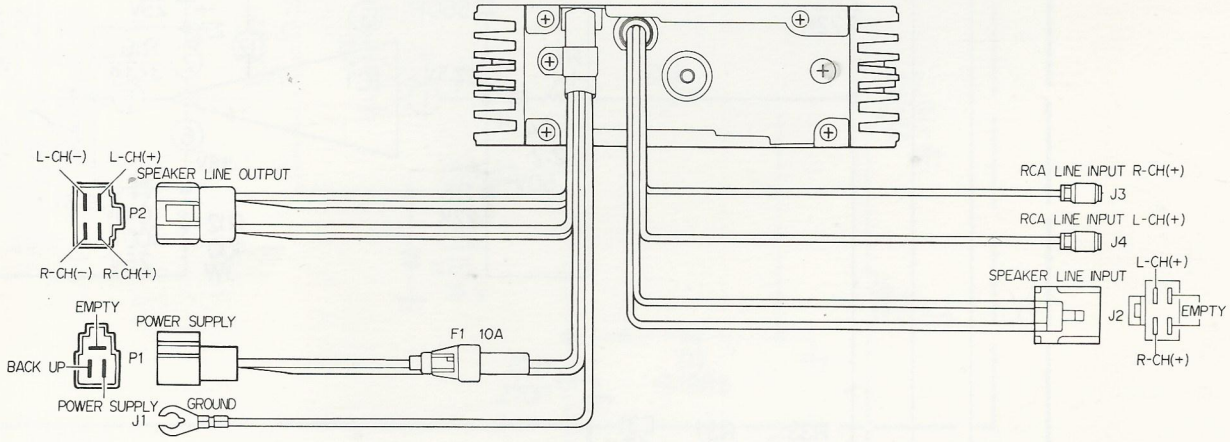

Fig. 1 (C23440251)

COMBINATIONS

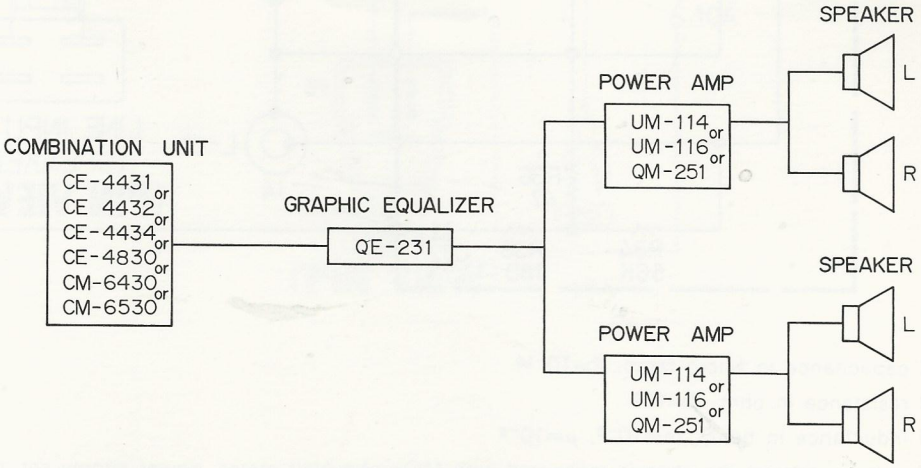

Fig. 2 (C32440251)

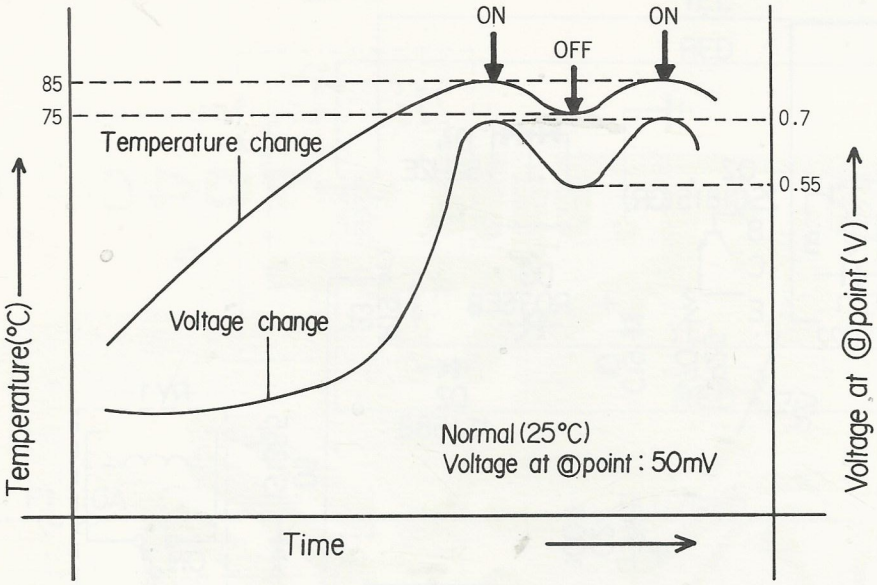

Thermistor characteristic in the protective circuit

Fig. 5 (See Fig. 3)

Ordinarily, the voltage of ⓑ-point is maintained at 42V, and the maximum output equals 40W×2. When the setting internal temperature (of a heat radiation plate) exceeds the temperature of approximately 85°C, the base current of transistor (Q6) starts to flow in owing to the increase of thermistor (Th1) resistance and it is turned on, simultaneously with a collector current being drawn. Thereby, the relay (RY1) is also energized, and a part of current is lead to the ground. Therefore, the voltage of ⓑ-point goes down to 14V, and the amplifying ratio of a power IC is decreased. As a result of it, the output will be reduced up to approximately 5W×2 (at the maximum output) in accordance with pre-determined design features. When the internal temperature goes down to approximately 75°C, both transistor (Q6) and relay (RY1) are turned off due to the decrease of thermistor (Th1) resistance, and thus, the normal operation of power IC is again restored.

NOTE: As the setting internal temperature varies in response to the installation place, if possible, avoid installing it such a place where it will be apt to become high temperature.

BLOCK DIAGRAM

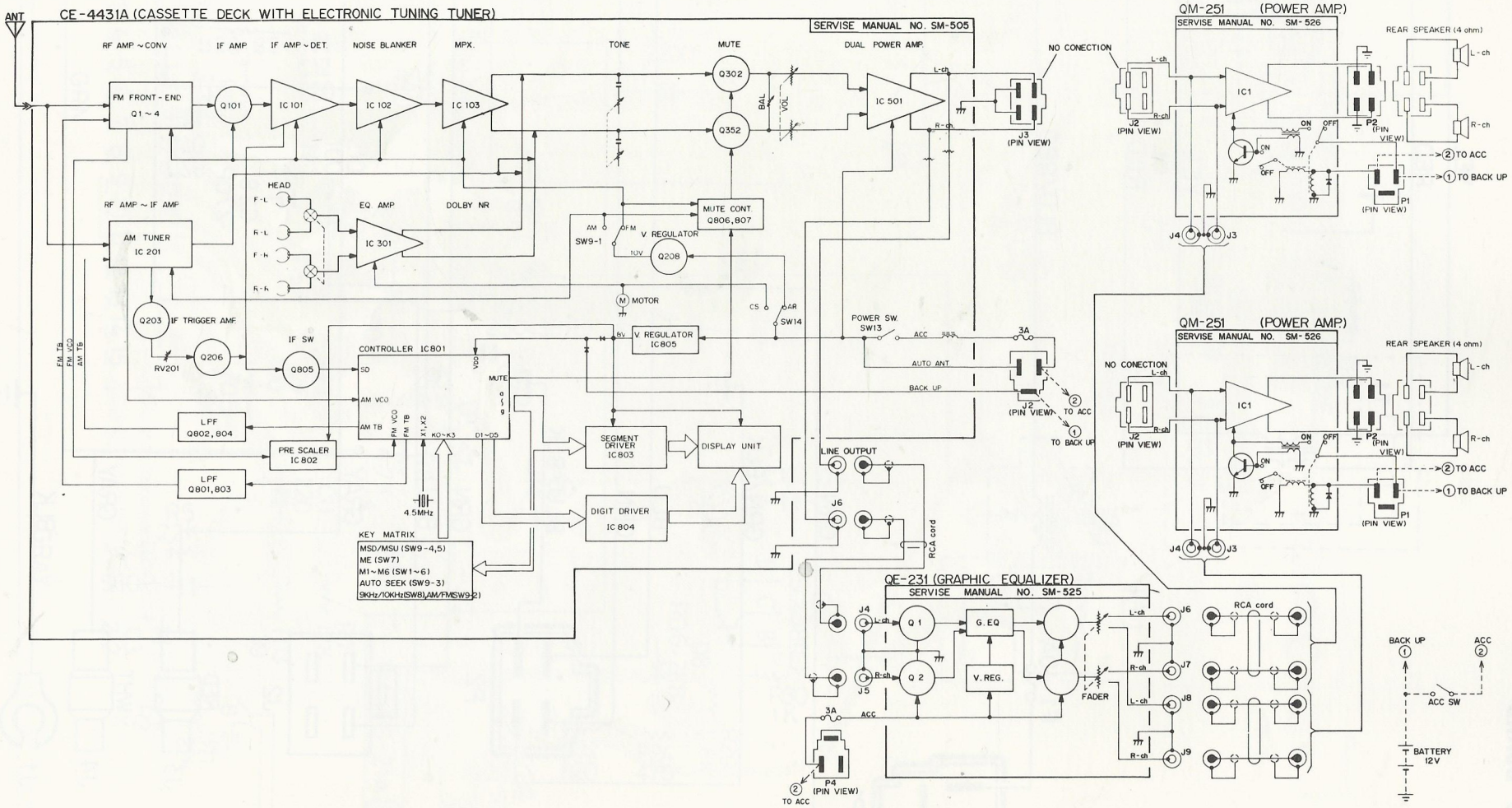

Fig. 6 (C12440251)

EXPLODED VIEW

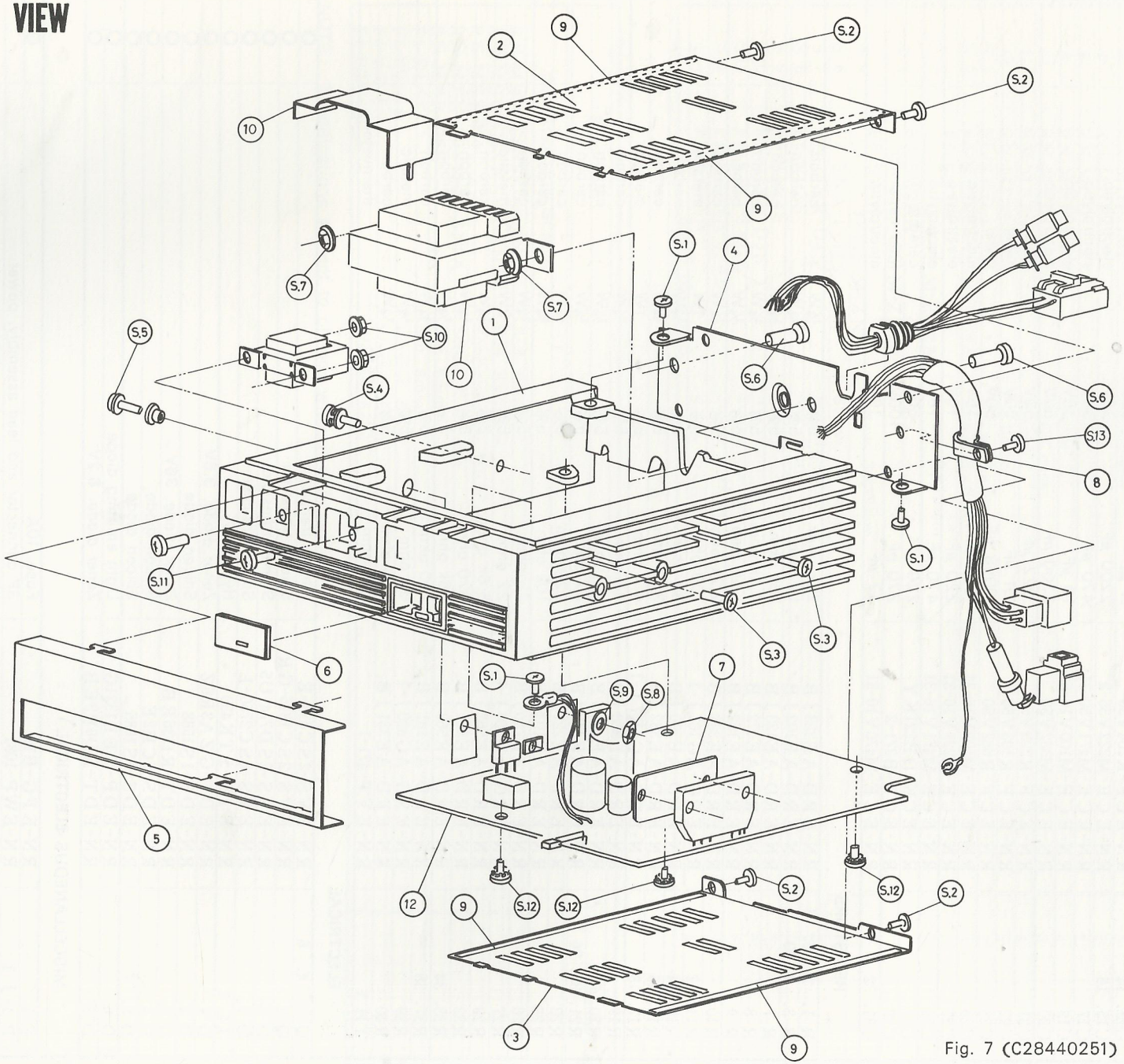

Fig. 7 (C28440251)

REPLACEMENT PARTS LIST

Note: Main replacement parts are marked ○ in the remarks column.

Symbol No. (Fig. 4)	Stock No.	Description				Remark
CAPACITORS						
C 3, 4	RN-ECE-M2R2V50-52	2.2 μF	50V		electrolytic	
C 5, 6	RN-ECK-DB561KY	560 pF	50V		ceramic	
C 7, 9, 10	RN-ECE-M101V25-41	100 μF	25V		electrolytic	
C 8	RN-ECE-M101V50-31	100 μF	50V		electrolytic	
C11, 12	RN-ECE-M221V25-31	220 μF	25V		electrolytic	
C13, 14	RN-ECF-R104V50	.1 μF	50V		mylar	
C15, 16	RN-ECE-M222V35-2	2200 μF	35V		electrolytic	
C17	RN-ECE-M471V50-31	470 μF	50V		electrolytic	
C19	RN-ECE-M100V16-52	10 μF	16V		electrolytic	
C20	RN-ECE-M332V50	3300 μF	50V		electrolytic	
C21	RN-ECF-R223V50	.022 μF	50V		mylar	
C22	RN-ECF-R103V50	.01 μF	50V		mylar	
C23	RN-ECF-R682V50	.0068 μF	50V		mylar	
C24	RN-ECE-M102V16-31	1000 μF	16V		electrolytic	
C25	RN-ECE-M221V16-31	220 μF	16V		electrolytic	
C26	RN-ECE-M471V16-31	470 μF	16V		electrolytic	
C27	RN-ECK-DB221KY	220 pF	50V		ceramic	
C28	RN-ECI-B271-2	270 pF	100V		filter capacitor	
C31, 32	RN-ECE-M470V10-51	47 μF	10V		electrolytic	
RESISTORS						
R 1, 2, 5, 6	RN-ERD-AE223JB	22k ohm	5%	¼W	carbon	
R 3, 4, 30	RN-ERD-AE102JB	1k ohm	5%	¼W	carbon	
R 7	RN-ERD-AE123JB	12k ohm	5%	¼W	carbon	
R 8	RN-ERD-AE472JB	4.7k ohm	5%	¼W	carbon	
R 9	RN-ERD-AE152JB	1.5k ohm	5%	¼W	carbon	
R10	RN-ERD-AE222JB	2.2k ohm	5%	¼W	carbon	
R11, 12	RN-ERG-AG101J-1	100 ohm	5%	1W	metalic	
R13, 14	RN-ERD-AE390JB	39 ohm	5%	¼W	carbon	
R15, 16	RN-ERD-AE332JB	3.3k ohm	5%	¼W	carbon	
R17, 18	RN-ERG-AG4R7J-1	4.7 ohm	5%	1W	metalic	
R19	RN-ERD-AE330JB	33 ohm	5%	¼W	carbon	
R20, 24	RN-ERD-AE471JB	470 ohm	5%	¼W	carbon	
R21, 35, 36	RN-ERD-AE470JB	47 ohm	5%	¼W	carbon	
R22	RN-ERD-AE221JB	220 ohm	5%	¼W	carbon	
R25	RN-ERD-AE103JB	10k ohm	5%	¼W	carbon	
R26	RN-ERD-AE750JB	75 ohm	5%	¼W	carbon	
R27	RN-ERG-AH220J-1	22 ohm	5%	2W	metalic	
R29	RN-ERD-AE562JB	5.6k ohm	5%	¼W	carbon	
R32	RN-ERD-AE821JB	820 ohm	5%	¼W	carbon	
R33, 34	RN-ERD-AE563JB	56k ohm	5%	¼W	carbon	
R37, 38	RN-ERD-AE181JB	180 ohm	5%	¼W	carbon	
R39	RN-ERG-AG820J-1	82 ohm	5%	½W	metalic	
R40	RN-ERD-AE331JB	330 ohm	5%	¼W	carbon	
TH 1	RN-EVT-471-1	100 ohm		25°C	thermistor	
ELECTRICAL						
Q 1, 4, 6	RN-EVS-2SC438-E	Silicon transistor				○
Q 2	RN-EVS-2SC1815-GR	Silicon transistor				○
Q 3	RN-EVS-2SD774-U5	Silicon transistor				○
Q 5	RN-EVS-2SC2750-L	Silicon transistor				○
IC 1	RN-EIE-STK430	Hybrid IC				○
D 1	RN-EDT-GZA3R6Z	Zener diode, 3.6V				○
D 2	RN-EDS-1S1588	Silicon diode				○
D 3	RN-EDT-RD36EB	Zener diode, 36V				○
D 4	RN-EDS-5CH2E	Silicon diode				○
D 5, 7	RN-EDS-1S1885	Silicon diode				○
D 6	RN-EDP-SEL1321G	Light emitting diode				○
D 8	RN-EDT-RD6R2EB	Zener diode, 6.2V				○
MISCELLANEOUS ELECTRICAL						
F 1	RN-EFG-B10	Fuse, 10A				○
P 1-J 1	RN-EWP-1081	3P connector and lead assembly, power				
P 2	RN-EWS-1060	4P connector and lead assembly, speaker				
J 2-J 3-J 4	RN-EWS-1061	4P connector and RCA cord, speaker				
T 1	RN-ETP-1002	Transformer, DC-DC converter				
L 1	RN-ELL-1017	Choke, 0.4mH				
RY 1	RN-EED-1029	DC relay				○
RY 2	RN-EED-1030	DC relay				○

Illus. No. (Fig. 7)	Stock No.	Description	Q'ty	Remark
MECHANICAL				
1	RN-MRE-1073	Radiator	1	
2	RN-MAD-1205	Cover, top	1	
3	RN-MAD-1197	Cover, bottom	1	
4	RN-MAD-1198	Cover, rear	1	
5	RN-MDS-1025	Escutcheon	1	○
6	RN-MDP-1311	Escutcheon	1	○
7	RN-MHF-1045	Holder	1	
8	RN-MCO-1008	Clamp	1	
9	RN-MPF-1040	Spacer	4	
10	RN-MSB-1095	Shield case	2	
11	RN-MSE-1243	Spacer	4	
12	RN-MPM-2659A	PC board	1	
S 1	F6-SBD-3×6S	Screw, 3×6mm	3	
S 2	F6-SBD-3×6S-M-ZN2A	Screw, 3×6mm	4	
S 3	F6-SBD-3×16S-M-ZN2A	Screw, 3×16mm	2	
S 4	F6-SW2NA-3×16S-M-ZN2A	Screw, 3×16mm	1	
S 5	F6-SW1NA-3×12S-M-ZN2A	Screw, 3×12mm	1	
S 6	F6-SNA-4×14S	Screw, 4×14mm	2	
S 7	RN-MNR-D4S	Nut, 4mm	2	
S 8	F6-N1-3S	Nut, 3mm	1	
S 9	F6-WM-3S	Washer, 3mm	1	
S10	RN-MNR-D3S	Nut, 3mm	2	
S11	F6-SBD-3×12S	Screw, 3×12mm	2	
S12	F6-SW6NA-3×6S	Screw, 3×6mm	3	
S13	F6-SW1NA-3×8S-M-ZN2A	Screw, 3×8mm	1	

Stock No.	Description	Q'ty	Remark
INSTALLATION SCREW			
RN-MBW-C5×8S-M-ZN2A	Bolt, 5×8mm	5	
RN-MBW-C5×16S-M-ZN2A	Bolt, 5×16mm	4	
RN-MET-144	Special screw, 6×20mm	1	
RN-MTN-A5×16-M-ZN2A	Screw, 5×16mm	4	
RN-MNR-D5S	Nut, 5mm	4	
F6-N1-6S	Nut, 6mm	1	
F6-WM-5S	Washer, 5mm	4	
F6-WB-5S	Washer, 5mm	4	
F6-WM-6S	Washer, 6mm	1	

NOTE: Specifications subject to change without prior notice.

SCHEMATIC

MPM-2659A(P-704C)

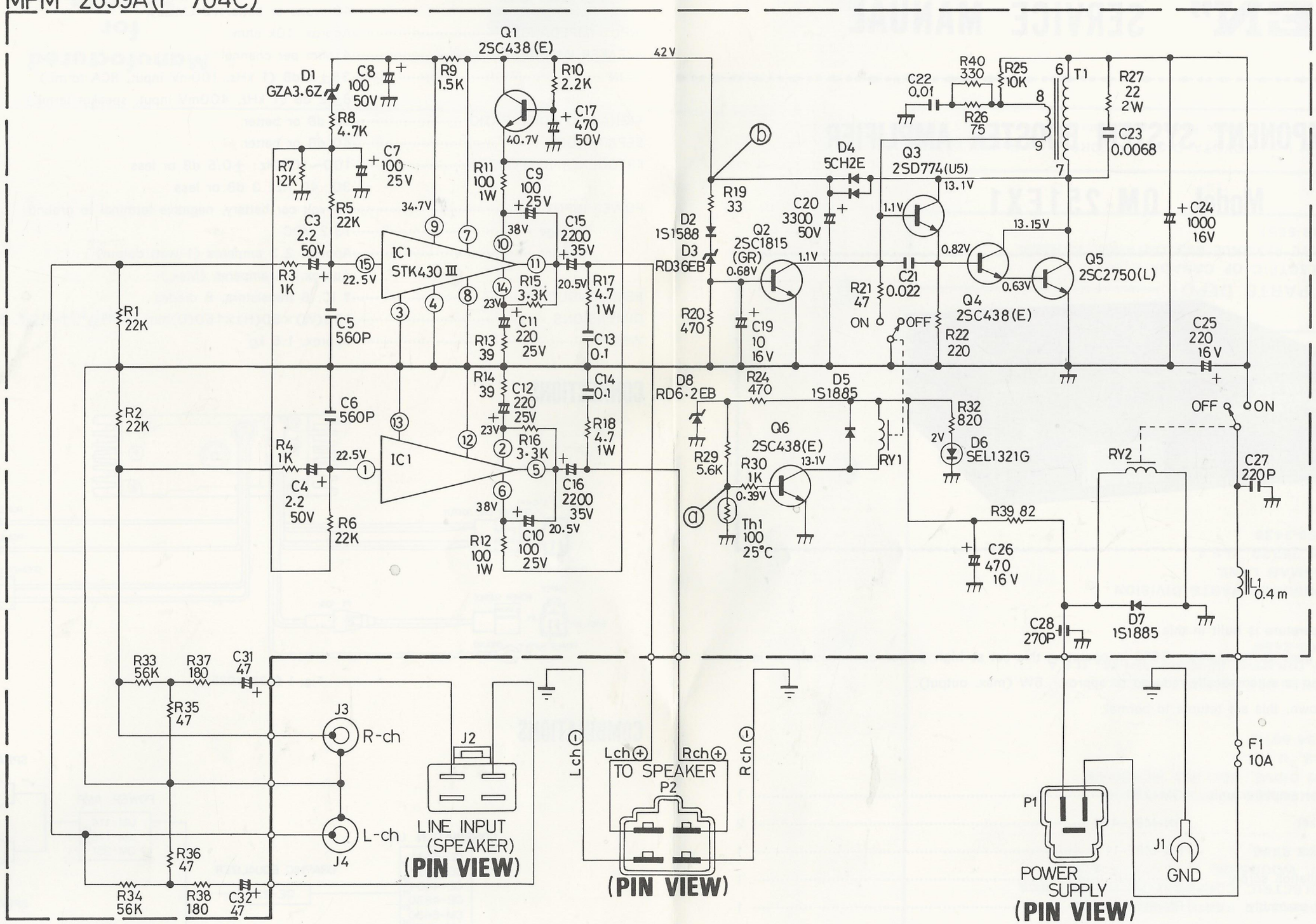

Fig. 3 (C24440251)

NOTES:

1. All capacitance in Micro farad, $P=10^{-12}$
2. All resistance in ohm, $K=10^{8}$
3. All inductance in henly, $m=10^{-3}$, $\mu=10^{-6}$
4. DC voltage against the chassis measured with 100k ohm/volt meter, power supply set at +13.2 VDC, no signal input.

WIRING ON PC BOARD

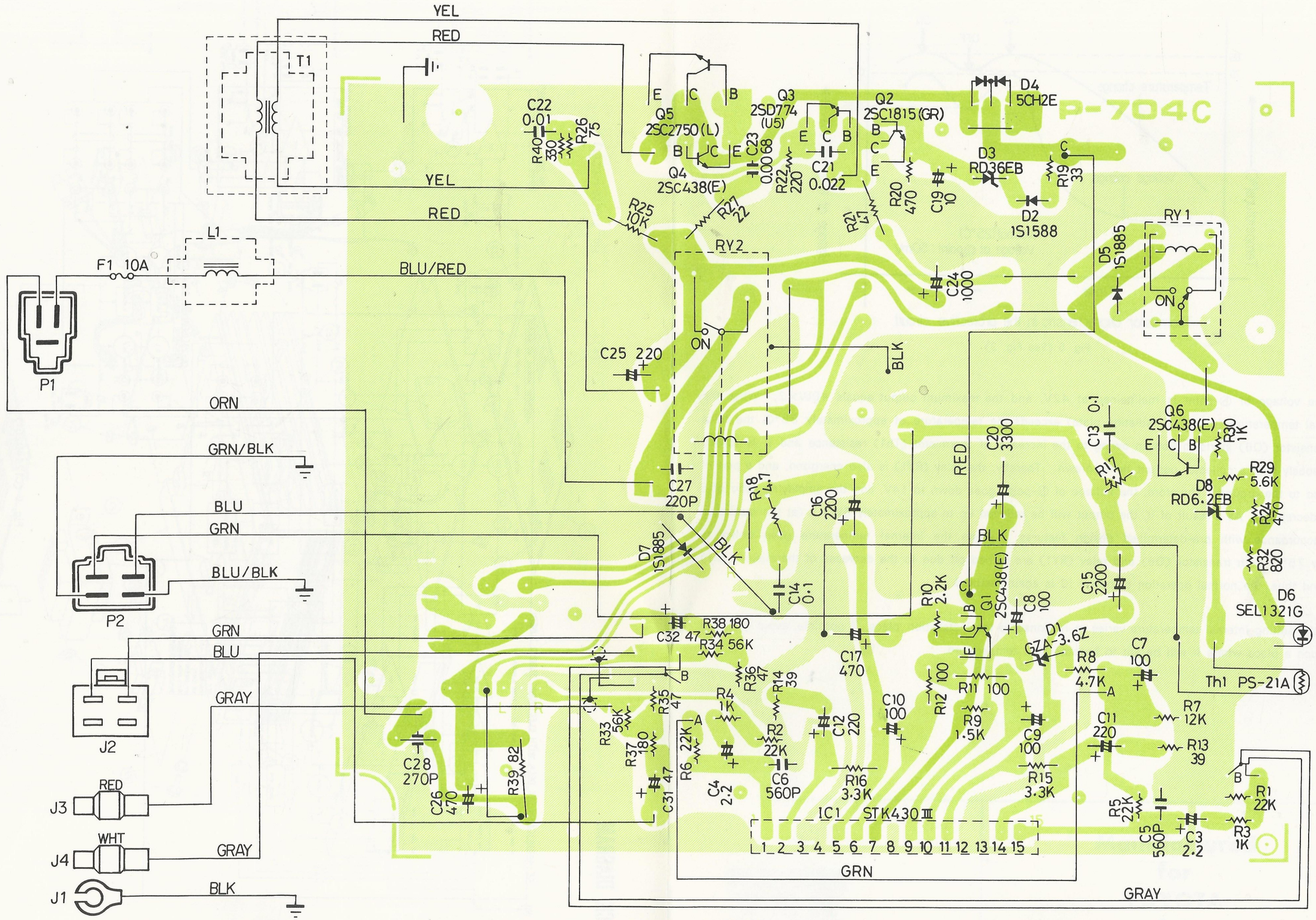

Fig. 4 (C27440251)